Assembly instructions Beam-antenna for ALF

Fundamental:
This antenna is a beam-antenne designed for the 2.4 GHz WLAN frequency band with a performance gain of 17dbi. Through the rich performance gain and the strong signal bundling, very high distances can be bridged. The assembly takes place on a rod with diameter 38 - 51mm. The antenna cable must be tightly screwed after assembly, mounting the two antennas in direct alignment to each other.

Installation:

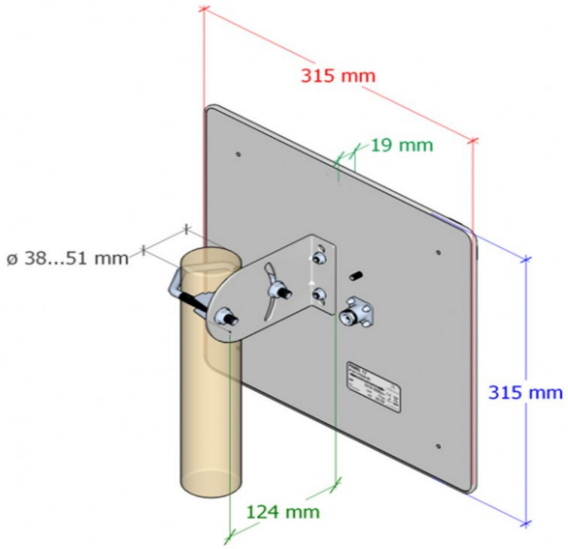

Attention: No liability for performance or durability problems, losses are taken over if the assembly was not carried out according to this manual.

Under the web-address https://www.process-informatik.de are product specific documentations or software-driver/-tools available to download.
If you have questions or suggestions about the product, please don't hesitate to contact us.

Process-Informatik Entwicklungsgesellschaft mbH
Im Gewerbegebiet 1
DE-73116 Wäschenbeuren
+49 (0) 7172-92666-0

info@process-informatik.de
https://www.process-informatik.de

Copyright by PI - 2026

Menutree Website:

+ Products / docu / downloads
  + Accessories
    + Antennas / Accessories
      + Beam antenna for ALF

QR-Code Website:

Please make sure to update your drivers before using our products.

Interface-converter with galvanic decoupling

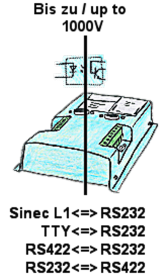

Coupling of 2 devices with different hardware-interfaces?

Devices of the UNI-COM-series offer the implementation of different hardware-interfaces with simultaneous galvanic-separation of both sides up to 1000V. Connections to the device via screw-terminals or via the integrated D-Sub with screw-locking. Universally usable for every application.

Only a 24V DC supply is required for the converter.

Remote Maintenance via keyboard and voice

The MESSI remote-station will be called directly by integrated mobile-phone. If a connection comes off, digital In- and Outputs for teleswitching will be transmitted. Each device can both transmit state of things and accordingly receive switch signals.

Detect unnecessary idling

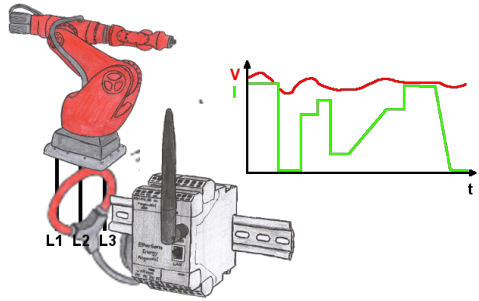

Detect the efficiency of your plant/machine by EtherSens-Energy-devices. Log the preset parameters and evaluate them then later. Find so unnecessary idle-times and increase so the efficiency.

Direct-mode „extended serial interface“

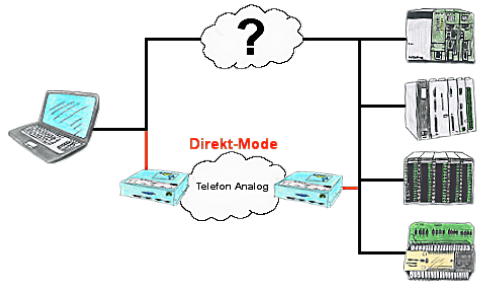

There is an unsupported control or data logger or converter integrated in your installation which protocol is not supported? No problem, the signs that the PC in the office sends will be transferred via telephone line by the Direct-mode , and on-site reproduced by the TP/TB. The way back is identical. So in that case there's also a communication to the electronic devices available.